R&D Activities in Optical Network Testbed at NiCT Keihanna Open Laboratory

Ken-ichi Kitayama

Osaka University, Japan

E-mail: kitayama@comm.eng.osaka-u.ac.jp

Outline

- JGN II optical network testbeds
- Current R&D programs
- Topics of recent R&D activities
  - Optical burst switching
  - Wavelength- & packet-selective OADM
  - Waveband path switching

JGN-II optical network testbeds

OXC based 10 Gbit/s backbone
Nation-wide 63 access points
Optical testbed (DF) segments available

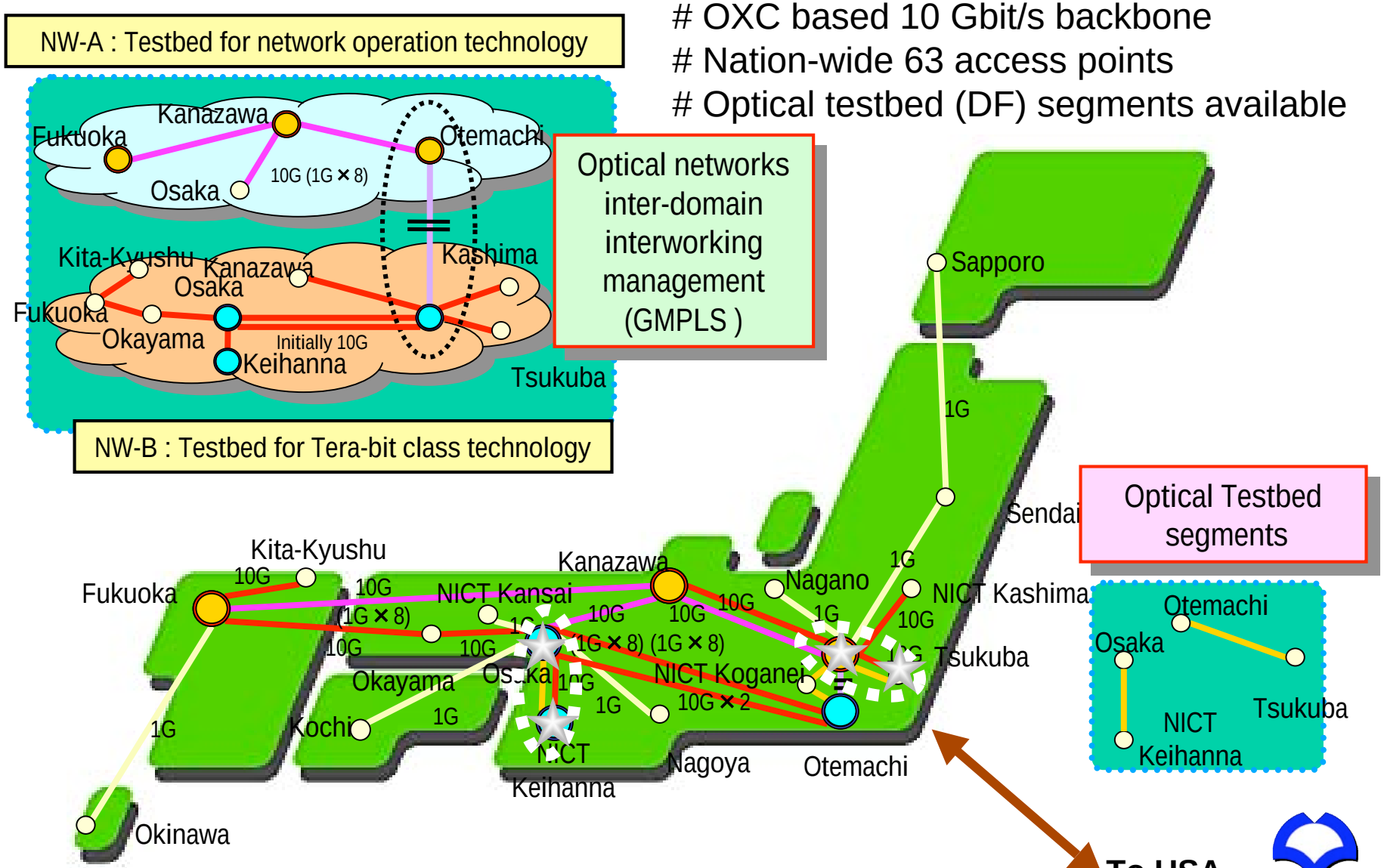

Optical network testbed A

- Total length=640km (64kmx10)
- Up to 40 WDM with 100GHz spacing
- C-band low NF(=5.3dB) EDFA
- 8x8 GMPLS routers

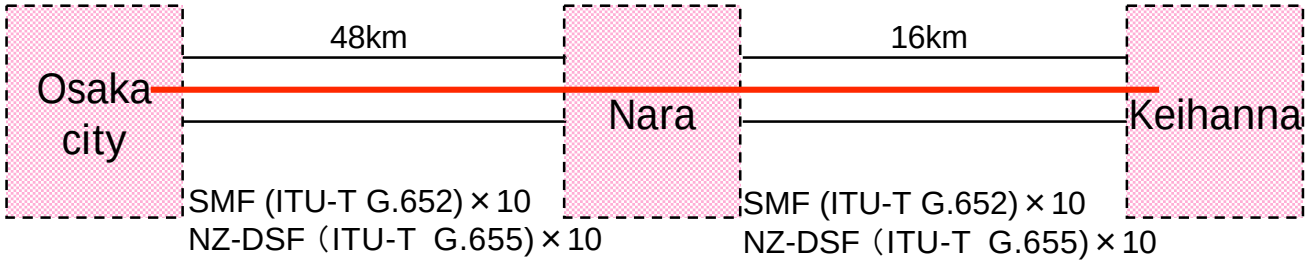

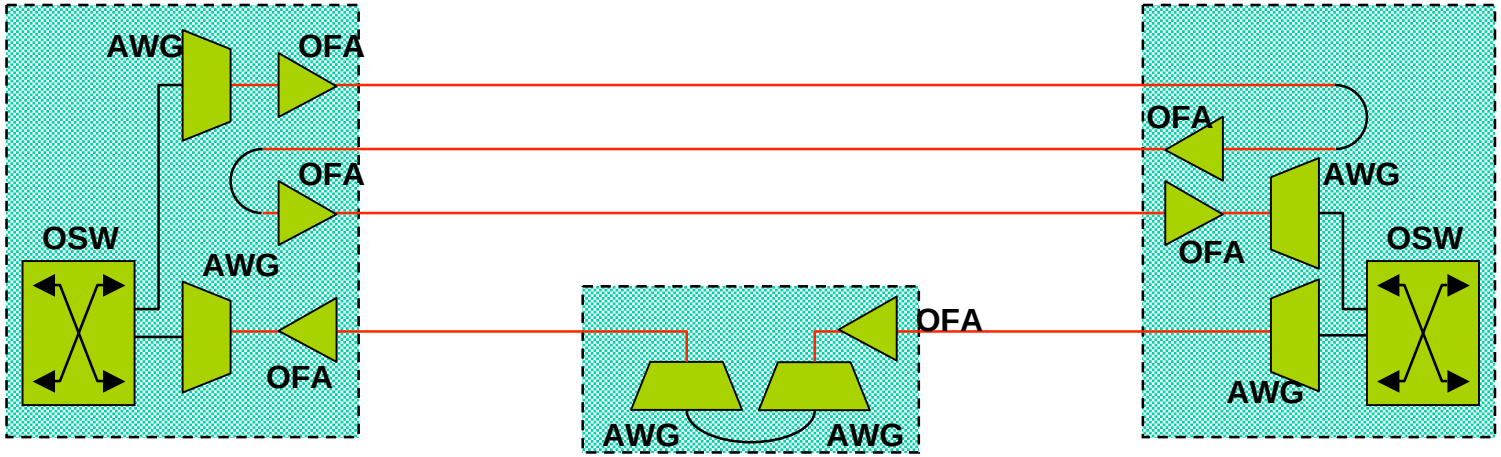

Optical network testbed B

- Total length=160km (80kmx2)
- DC&DC slope compensated
- 30nm spectral range in C-band

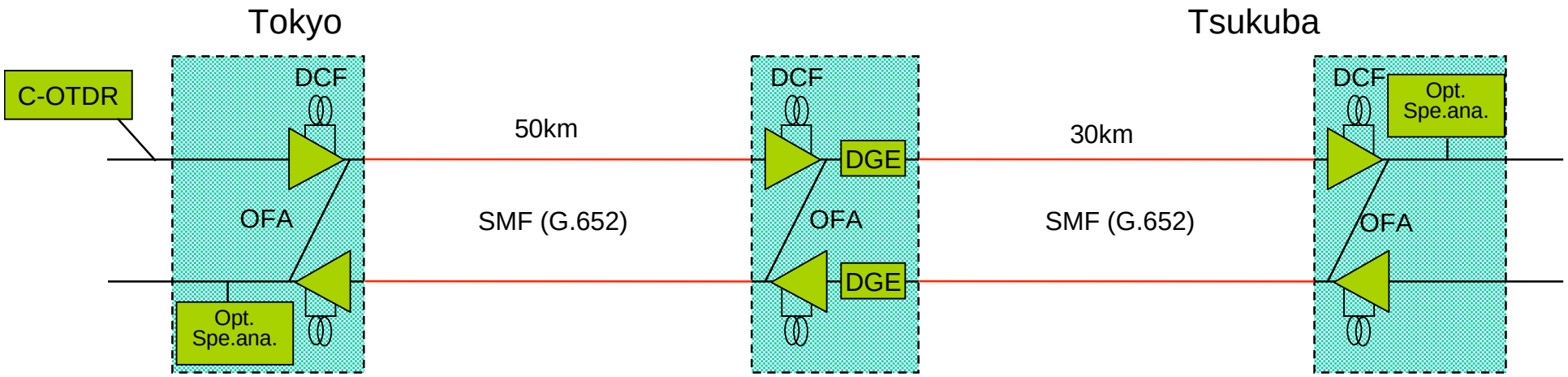

Up-to-date facilities for optical networking experiments

- Bit error rate tester etc.
- Measurement instruments

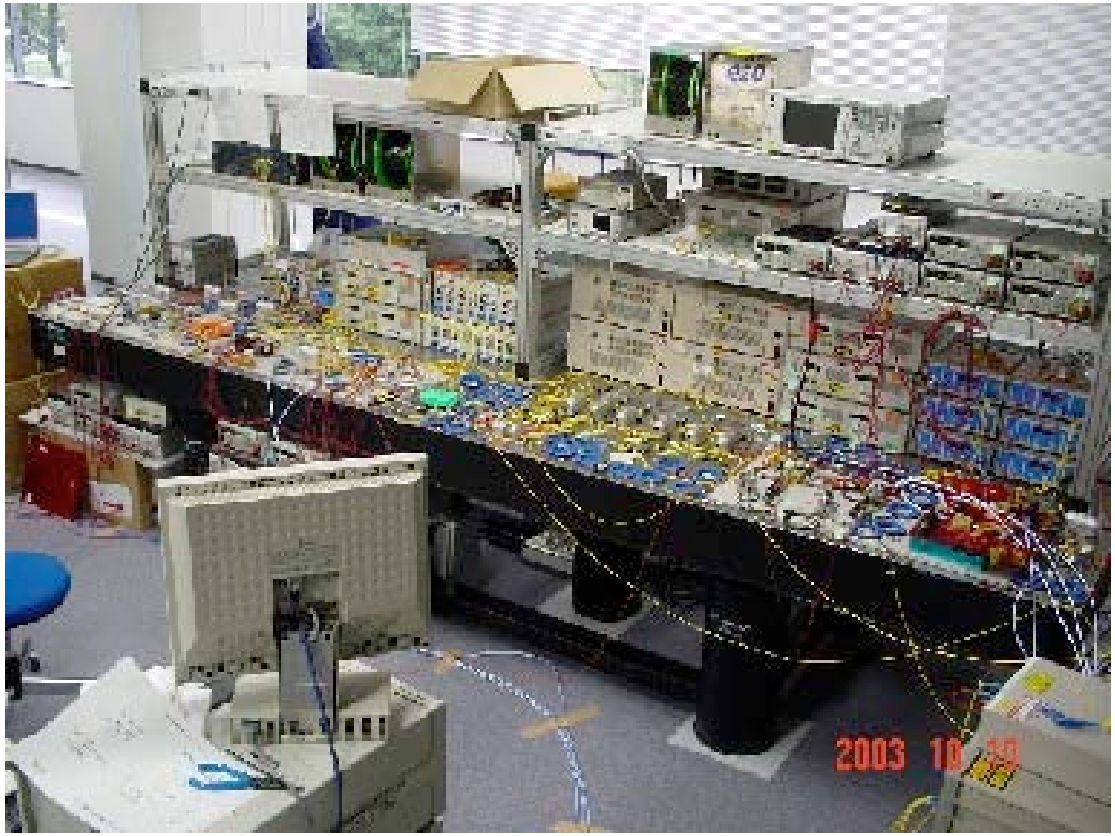

Outline

- JGN II optical network testbeds
- Current R&D programs
- Topics of recent R&D activities
  - Optical burst switching
  - Wavelength- & packet-selective OADM
  - Waveband path switching

Current R&D programs

- Standardization activities of GMPLS
  - Aiming at the international standardizations in ITU-T and OIF.
  - Multicarrier external network-network interface(E-NNI)
    - 4 carriers, 7 major vendors, 1 measurement instrument, NiCT,1 university

- Collaborative activities for NG optical networkings
  - 9 members (carriers, major vendors, universities)
  - Optical burst switchings, Optical node, GMPLS Control plane

- Adhoc programs
  - Wavelength- & packet-selective OADM by NiCT, Fujitsu Labs., and Osaka Univ.
  - Waveband path switching by NTT Labs.

Outline

- JGN II optical network testbeds
- Current R&D programs
- Topics of recent R&D activities
  - Optical burst switching
  - Wavelength- & packet-selective OADM
  - Waveband path switching

Optical burst switching (OBS) experiment

❑Connection-guaranteed transmission

- ➢The switch connection in each node is simultaneously setup using 2-way signaling.
- ➢Connection setup time of less than 30ms is achieved. (Independent of number of hops)

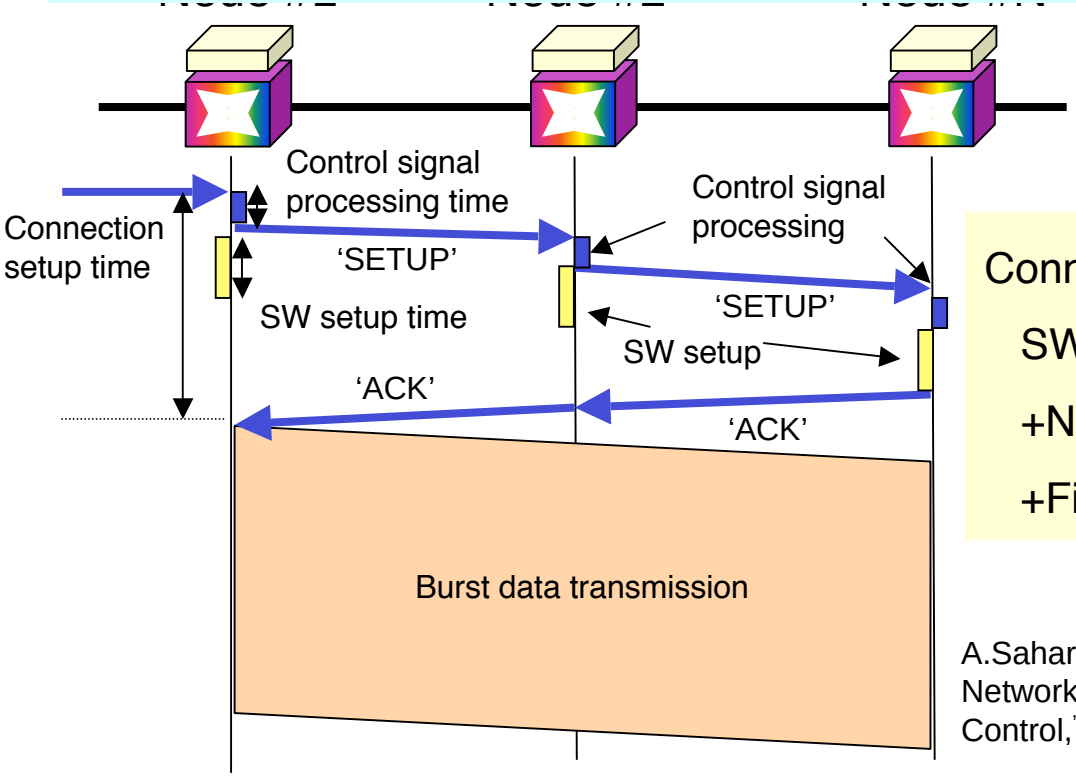

Connection setup time＝

SW setup time

+Node number (N) x control signal setup time

+Fiber transmission delay

A.Sahara et al, "Demonstration of Optical Burst Switching Network Utilizing PLC and MEMS Switches with GMPLS Control," ECOC2004

Experimental setup

Optical burst switching experiment in a 6-node network utilizing 2 MEMS switches and 4 PLC switches

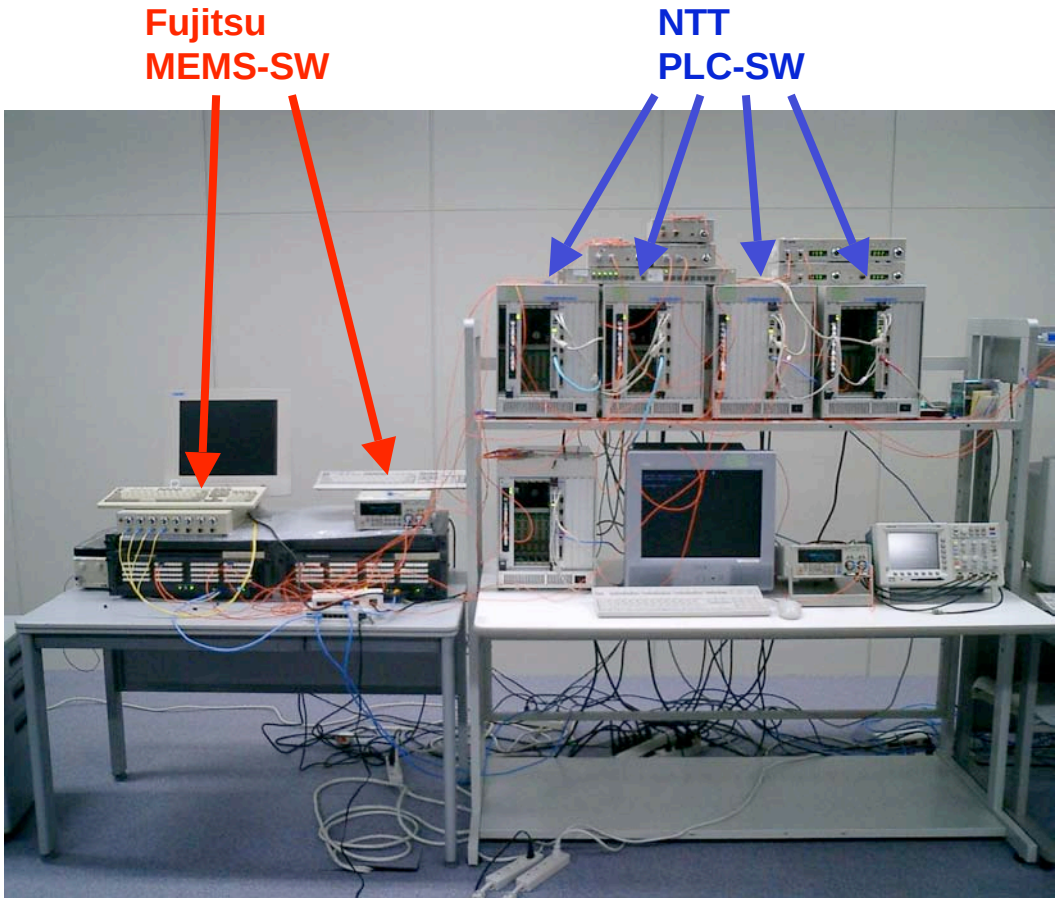

Fast switching technology using GSMP

GSMP(General Switch Management Protocol)
•Protocol for node control in photonic networks.
•PLC switch achieves fast switching of less than 6 ms.

The benefit of GSMP
A network constructed by various switches can be controlled.

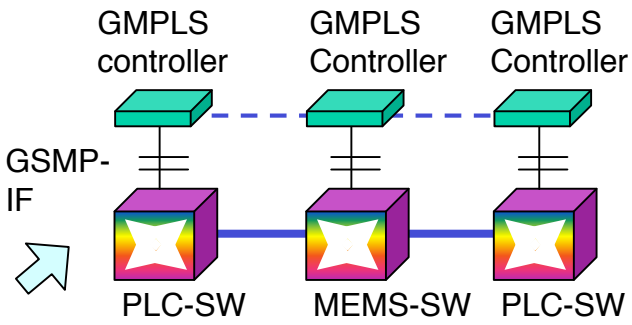

PLC (Planer Lightwave Circuit) Optical switch

Response of optical switch controller with GSMP
SW setup time (< 6ms) is achieved in PLC optical switch.

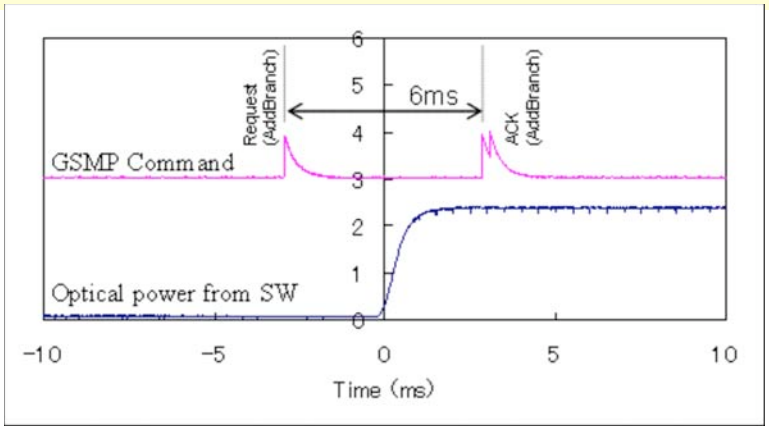

Osaka Univ.

High-speed, large-scale 3D-MEMS switch

Requirements for Optical SW of OBS

- Low insertion loss
- High speed switching
- Large scale for mesh network topology

3 Dimensional MEMS

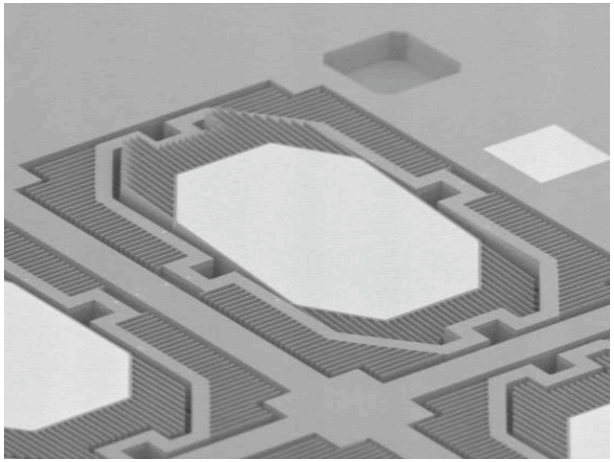

High-speed comb-driven MEMS mirror

MEMS Optical Switch

Features

-Control interface: GSMP
-Large scale: 128 x 128 channel
-High speed switching: 1ms
-Low power consumption: 22W
-Small size: 430 x 131 x 400mm

Experimental results

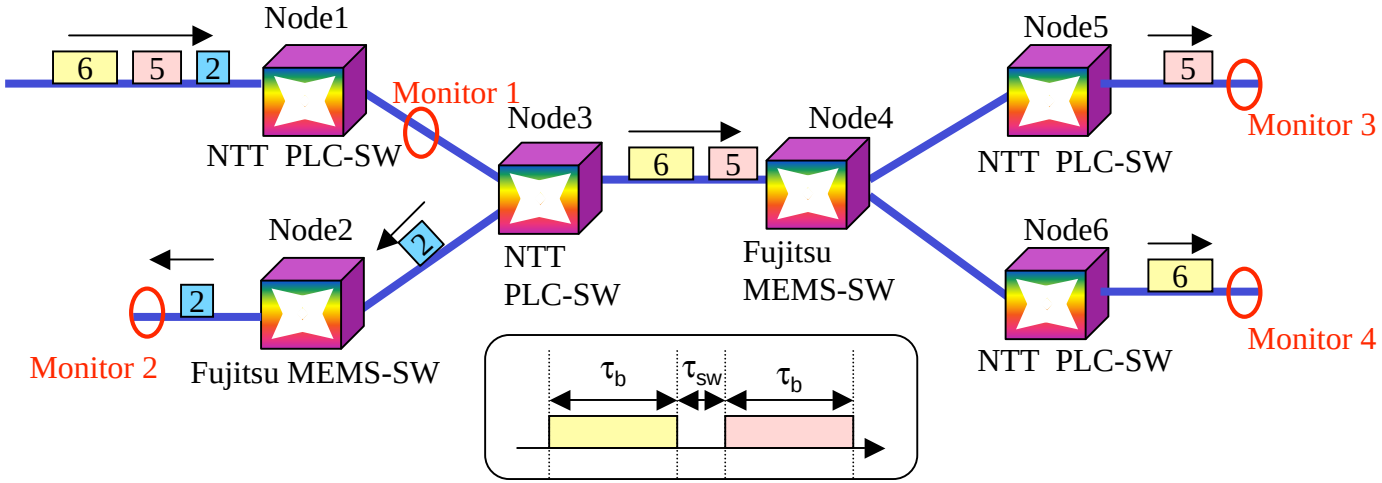

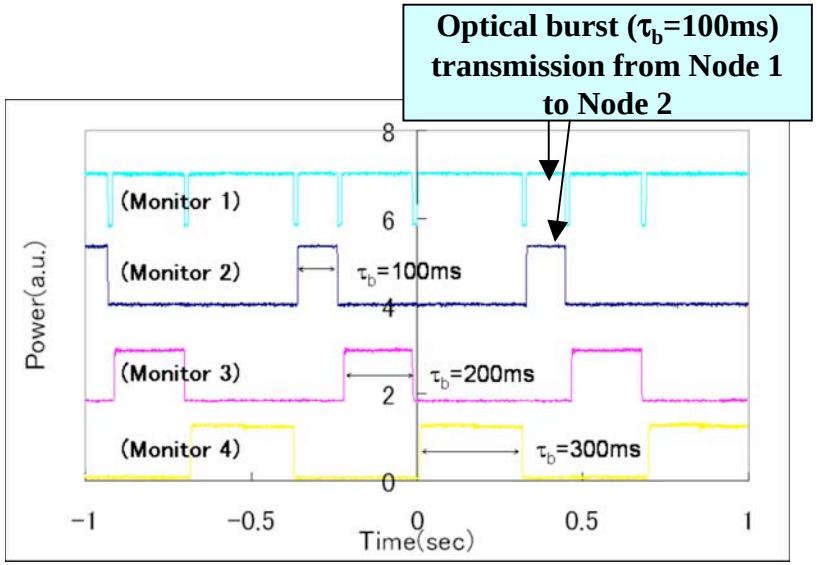

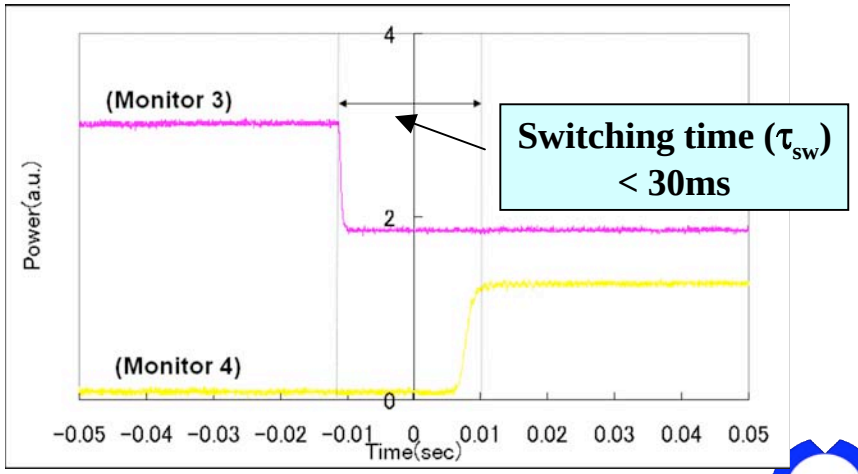

Wavelength-tunable and packet-selective OADM - WTPS OADM -

- Problems of OADM
  - A wavelength path is coarse & fixed in data granularity

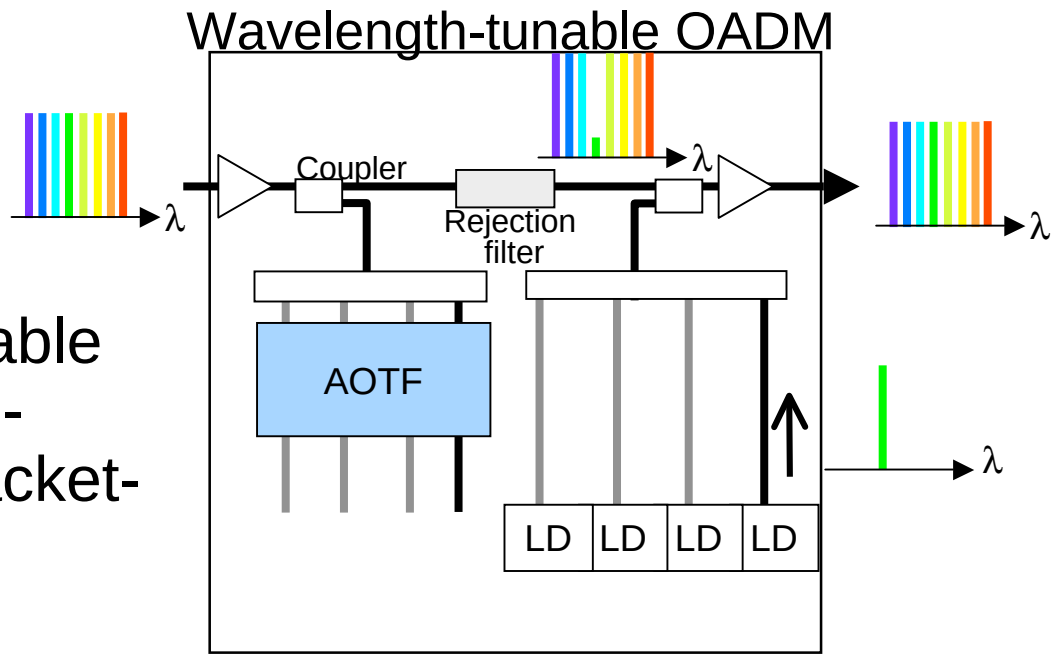

- Solution
  - Data granularity-adjustable OADM with wavelength-selectivity as well as packet-selectivity

N. Kataoka et al., "Demonstration of Data Granularity-Adjustable Ring Network Using Wavelength-Tunable and Packet-Selective OADM" ECOC2004

Architecture of WTPS-OADM

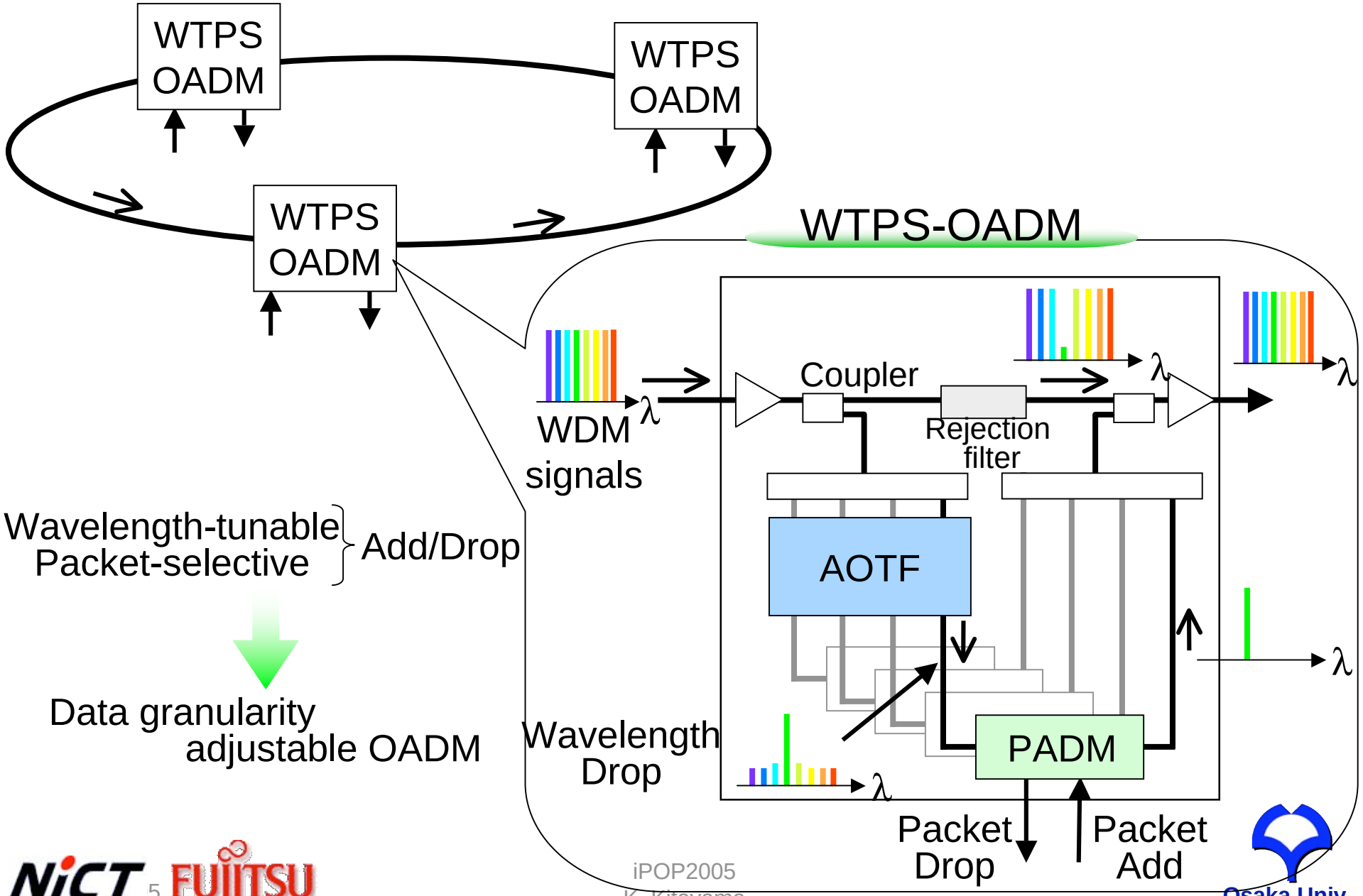

Experimental setup & results (1)

32 wavelengths
100 GHz spacing
1538.92～1563.72 nm

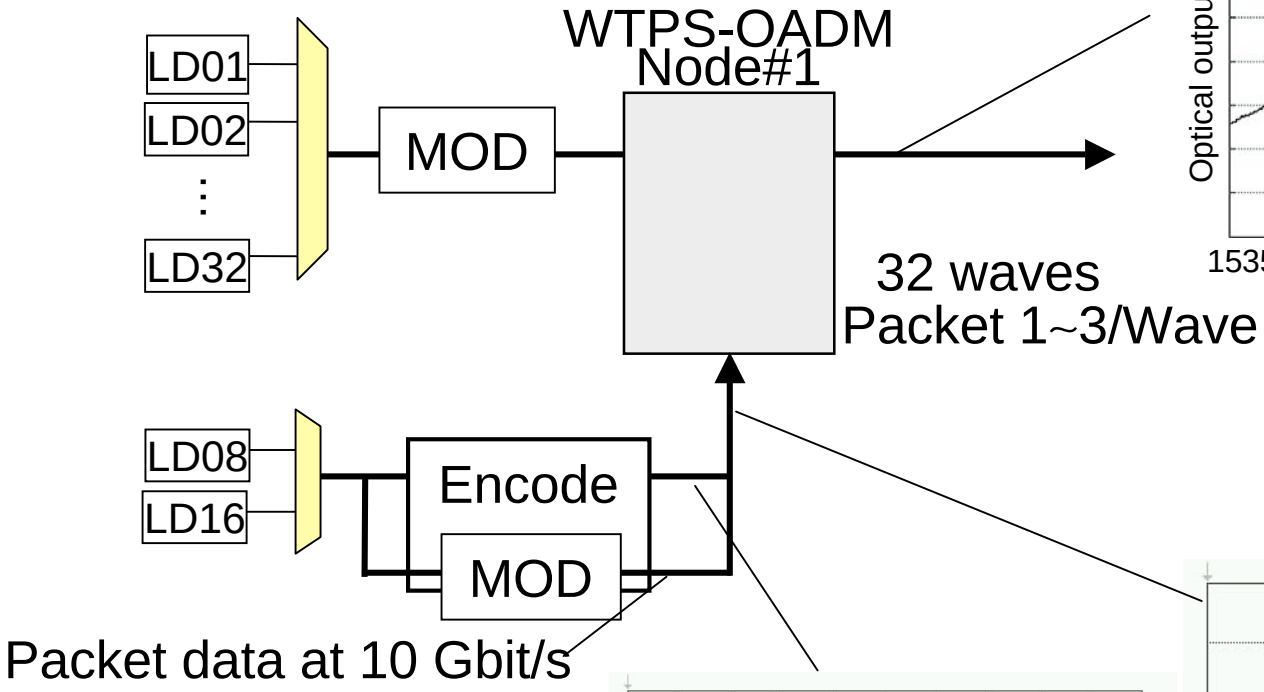

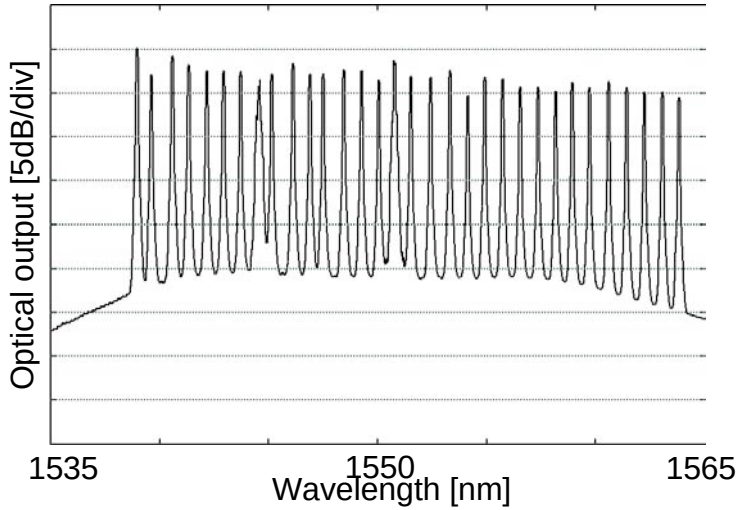

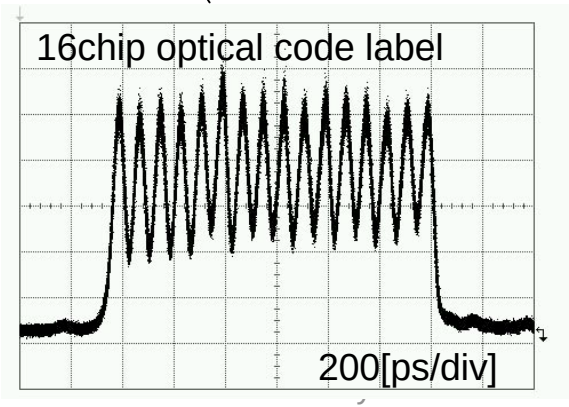

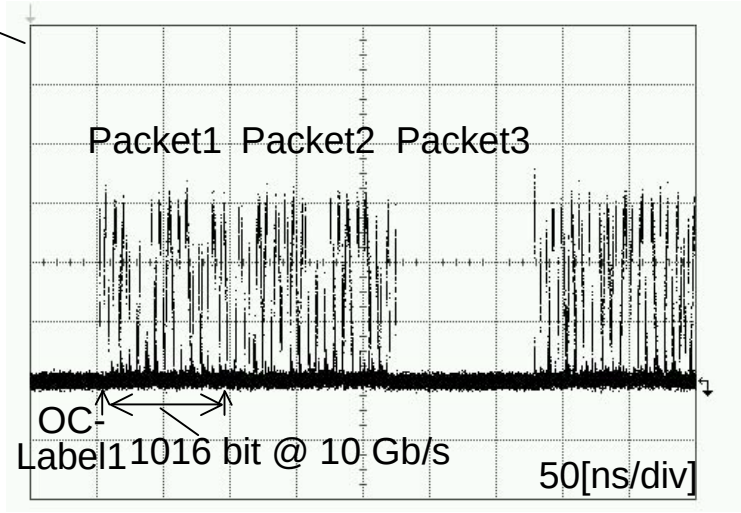

Experimental setup & results (2)

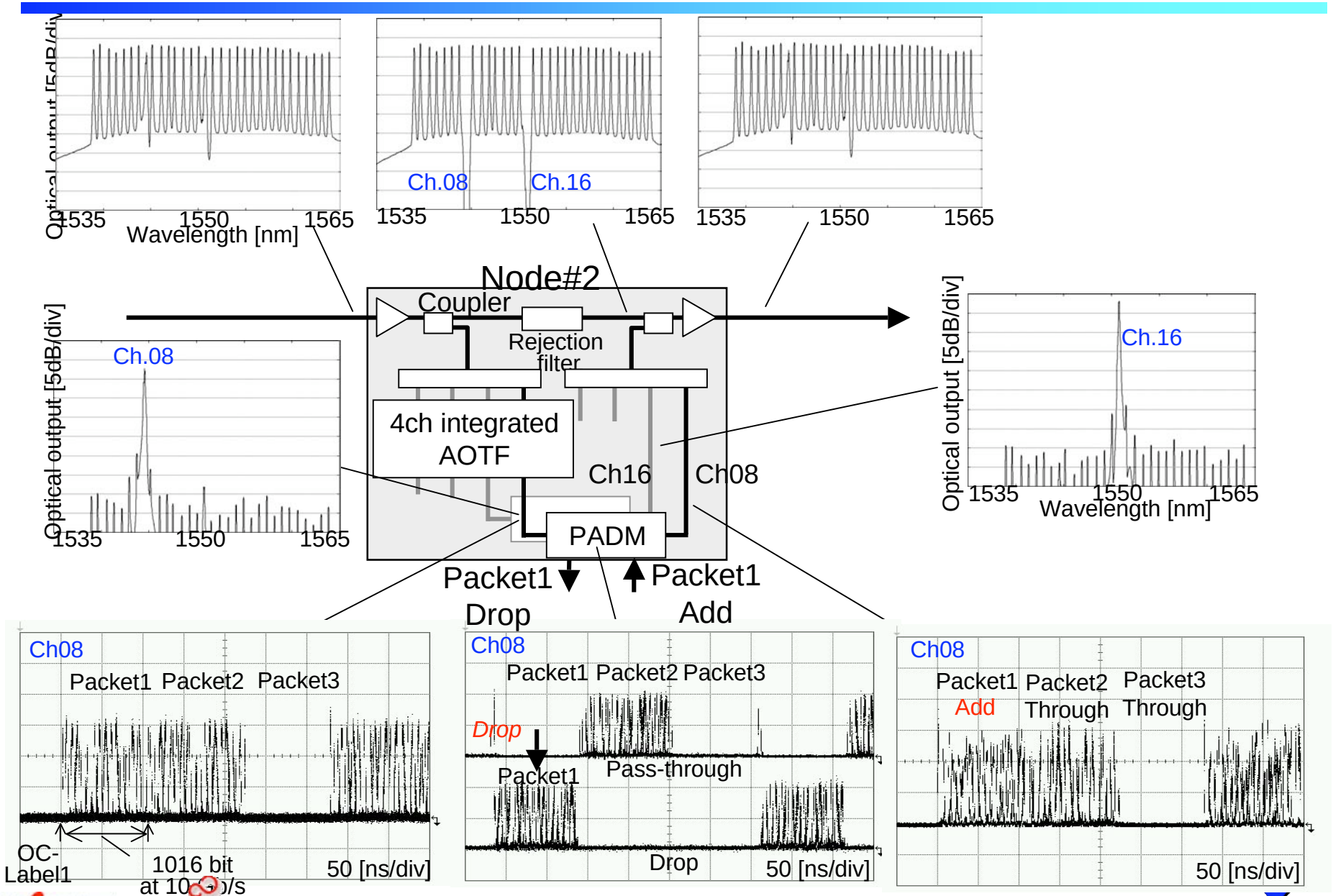

Virtual Grouped-Wavelength-Path Switching

- For future photonic NWs **throughput enhancement** is strongly required

Increased number of wavelength paths (WPs)

- Optical Switch (OSW) size reduction
- Simplification of WP administration

- Grouped-Wavelength-Path (GWP)*

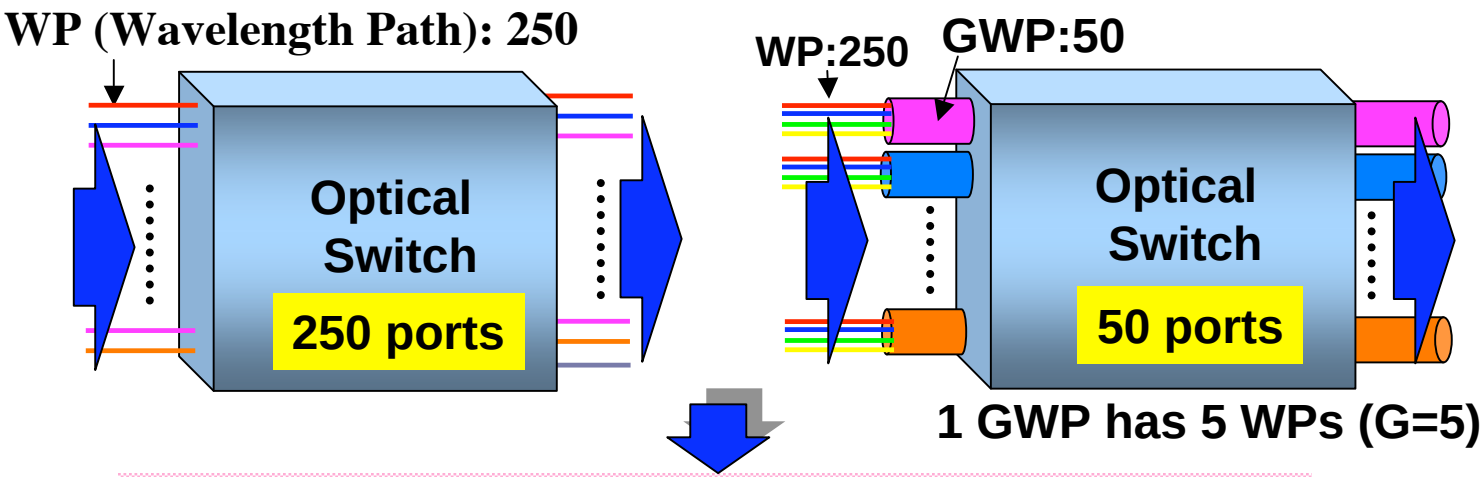

Suitable for large capacity photonic NWs

Configuration of VGWP switching node

- OSW: 8x8 PLC matrix switch
- Waveband converter
  - Parametric wavelength conversion
    Quasi-phase-matched $LiNbO_3$(QPM-LN)
    - waveband conversion
    - Bit rate and signal format independency
    - High conversion Efficiency
  - Polarization independency

Polarization diversity configuration*

* L.Brener, et al., Electron. Lett., Vol. 36,pp66-67, (2000).

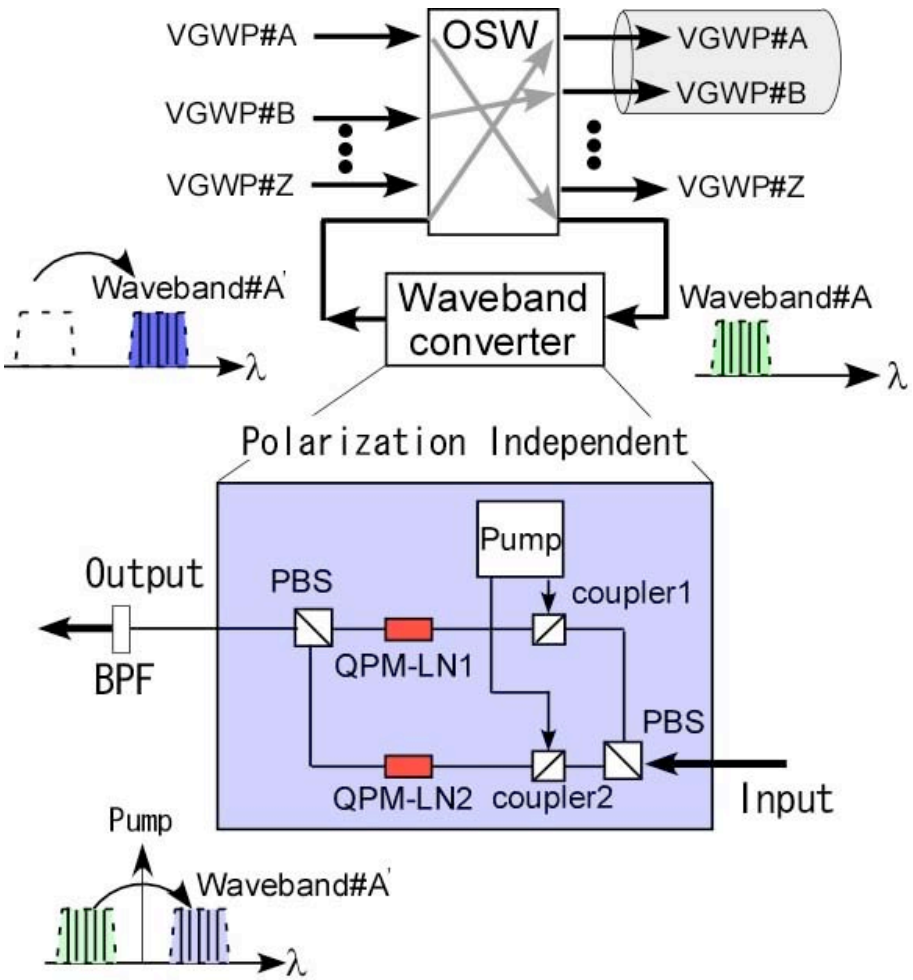

Experimental setup

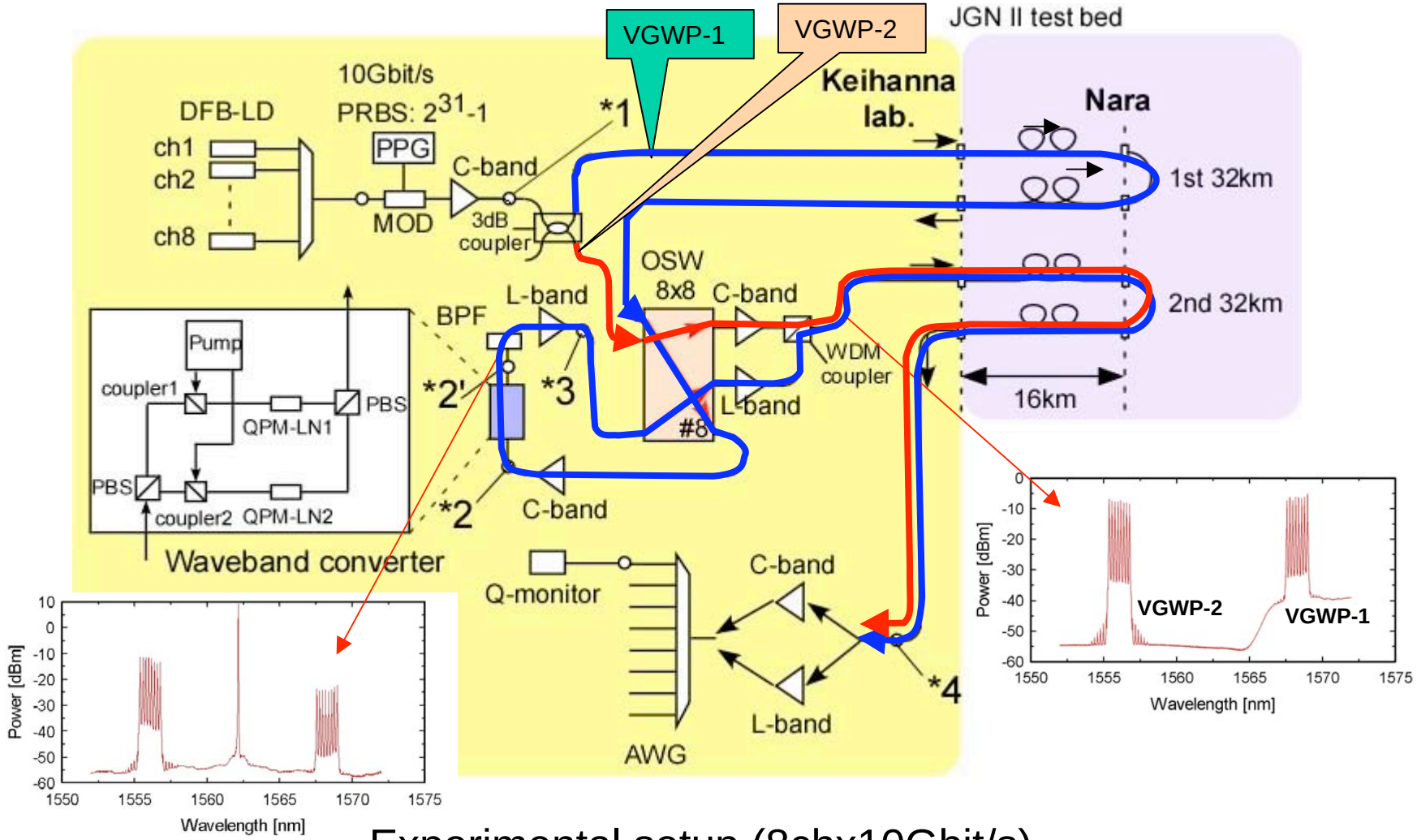

Experimental setup (8chx10Gbit/s)

VGWP-1: 1st 32km→Waveband converter→2nd 32km transmission
VGWP-2: 2nd 32km transmission

Results: GWP-8chx10Gbit/s

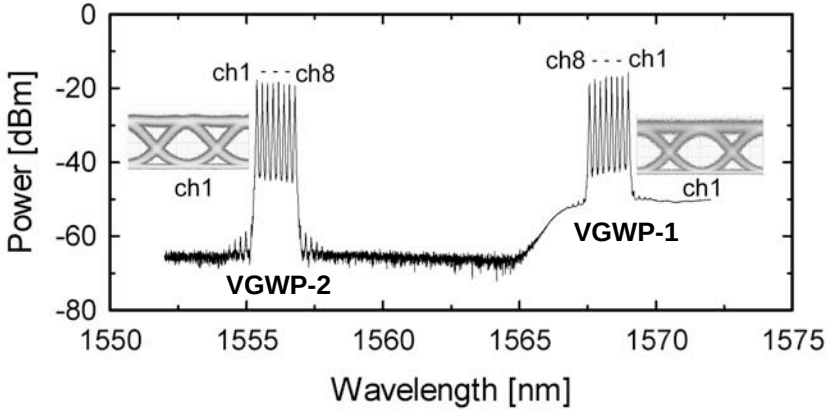

Spectrum and eye opening at *4

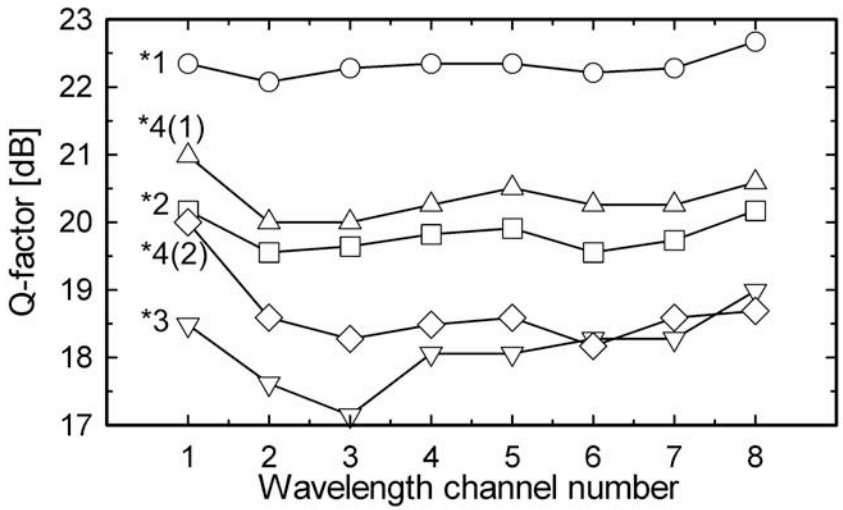

*1: After modulation
*2: 1st 32km transmission (VGWP-1)
*3: After wavelength conversion (VGWP-1)
*4(1): Non-wavelength converted results (VGWP-2)
*4(2): Wavelength converted results (VGWP-1)

Q-factor results

All points have Q>15.6dB (=BER 10^{-9})

Thank you!